FA-182TD Exploded Diagram

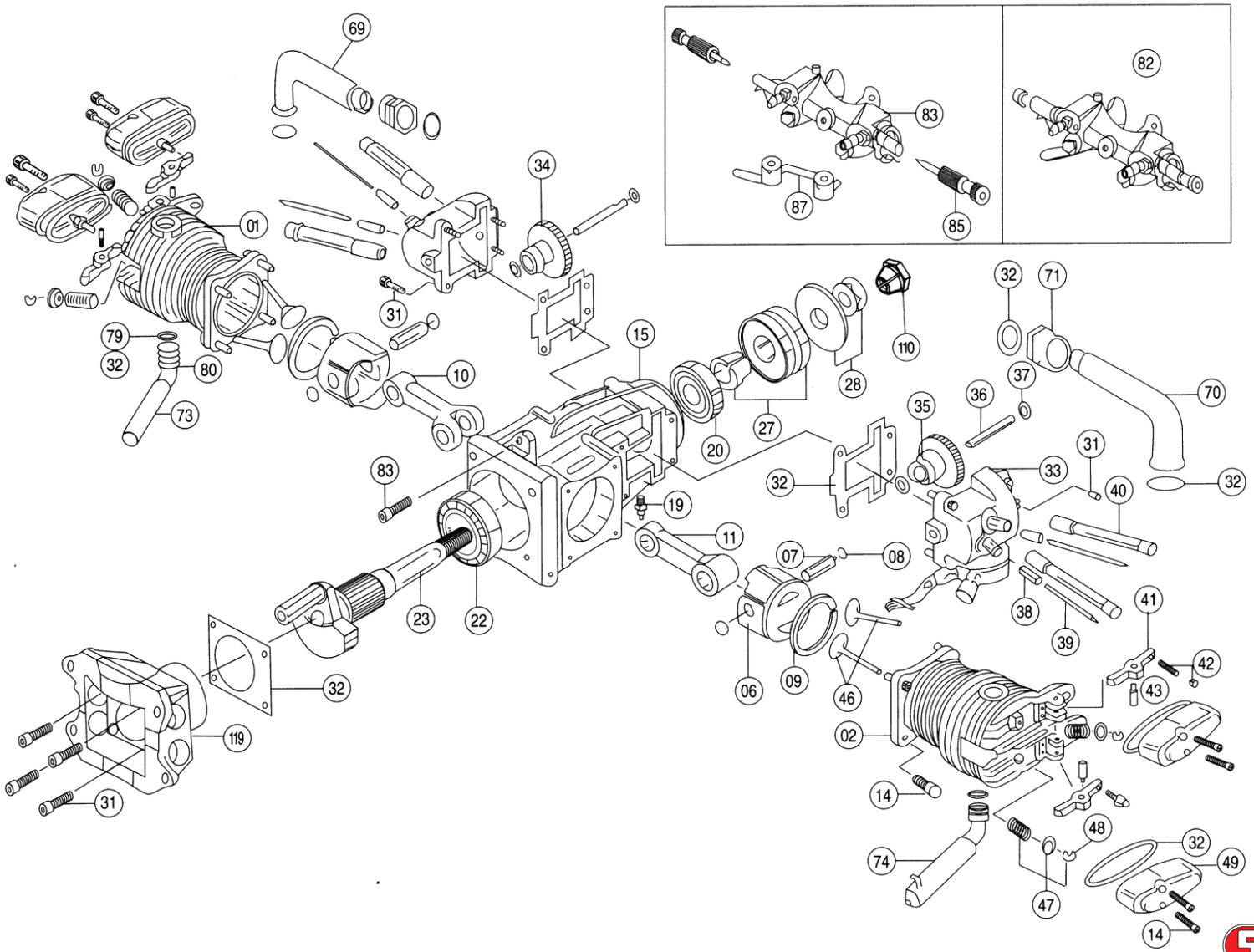

Error & Omissions Excepted: Please note that whilst every effort is made to ensure the accuracy of the information contained within, errors may occur. MacGregor Industries Ltd can accept no responsibility for losses or damages caused.
© Copyright MacGregor Industries 2010