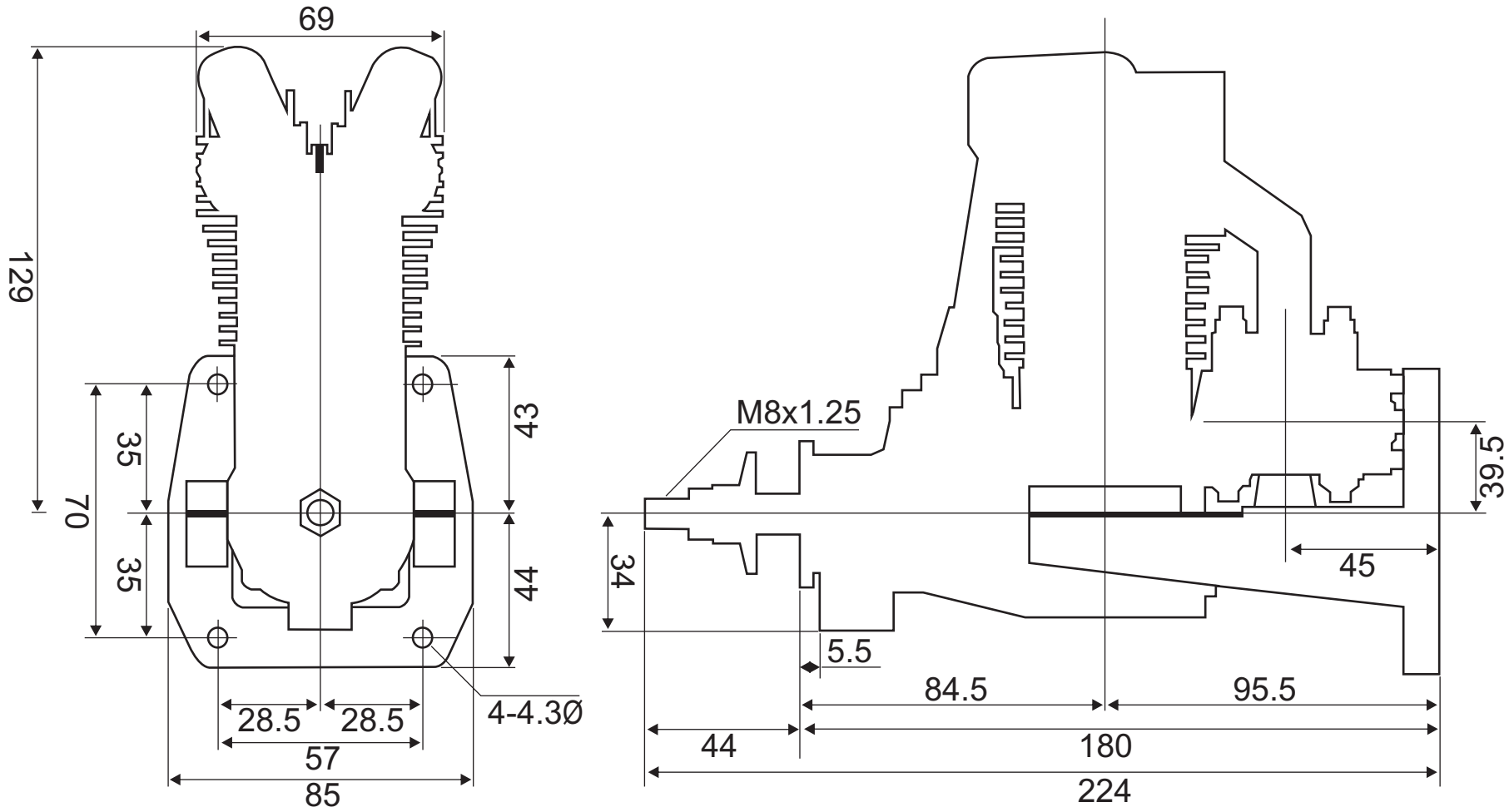

FG-36 Four-Stroke Single Cylinder Petrol Engine